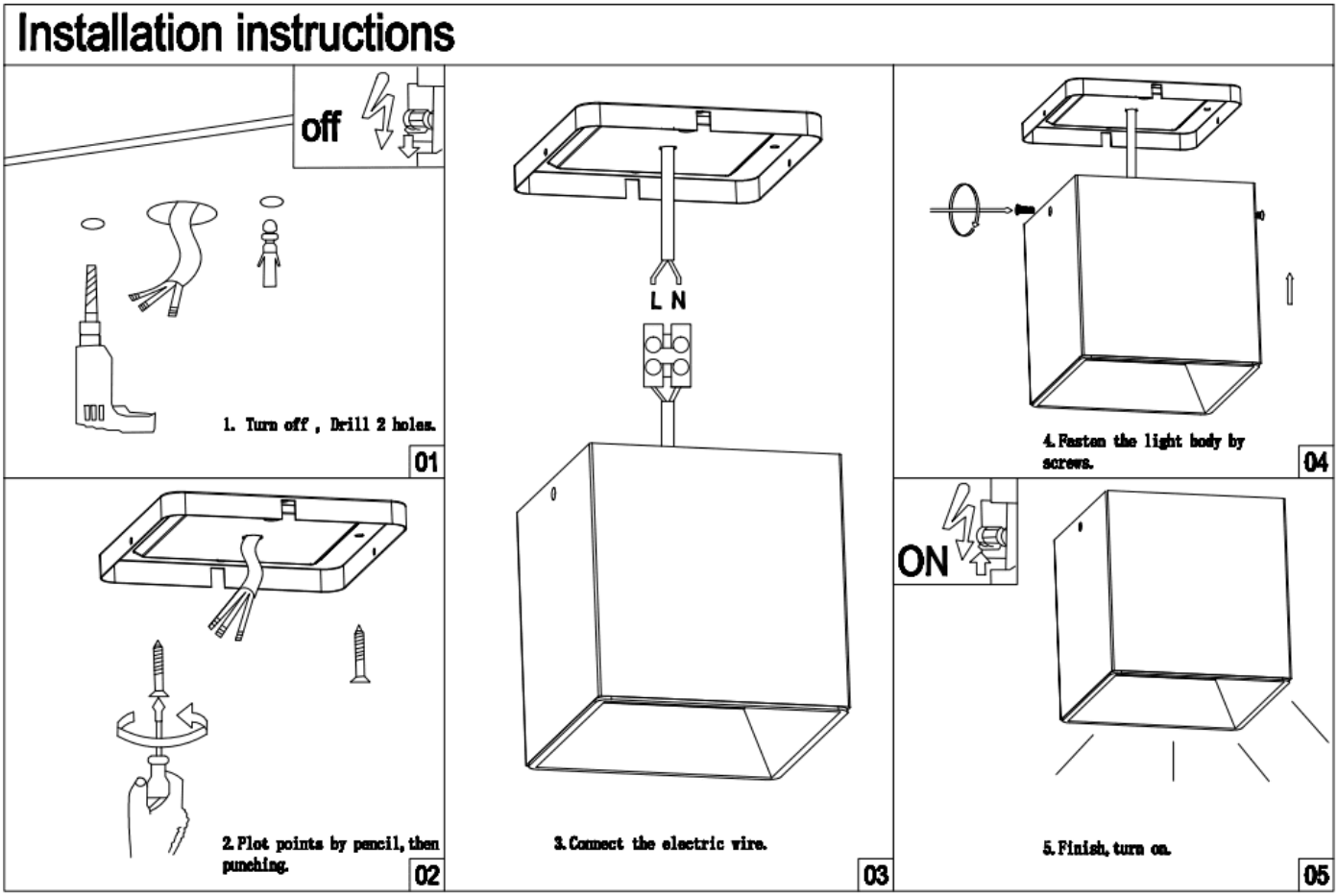Code article 86.OC01.4311.01